INSTRUCTION MANUAL

HAMMARLUND
HQ-129-X
AMATEUR
COMMUNICATIONS
RECEIVER

HAMMARLUND MANUFACTURING CO., INC.

460 West 34th Street : : New York 1, N. Y.

HQ-129-X COMMUNICATIONS RECEIVER

TECHNICAL DESCRIPTION

THE SIGN OF QUALITY

ESTABLISHED 1910

OPERATING INSTRUCTIONS

A PRODUCT
OF

HAMMARLUND MANUFACTURING CO., INC.

460 West 34th Street : : New York 1, N. Y.

Fig. 1—The tuning controls are arranged for convenient operation.

INTRODUCTION

The new HQ-129-X is a highly efficient modern 11-tube superheterodyne type of communications receiver designed to give years of satisfactory performance. It is the product of years of experience in the development and manufacture of communication receivers.

This receiver is sensitive enough to pick up extremely weak signals and has the selectivity to separate signals in the more crowded bands. It covers a continuous range of frequencies from 540 KC. to 31 MC, or from 555 meters to 9.7 meters, in six bands. Band spread tuning is supplied on the four higher frequency bands, with actual calibration in the 80, 40, 20 and 10 meter amateur bands. Calibration charts may readily be made for any other band such as the short wave international broadcast bands within the range of the four high frequency bands.

While designed particularly for communications use, this receiver provides excellent quality for music and voice reception in both the standard and the short wave broadcast bands. Either loud speaker or headphone reception can be used. Many types of noises and interference are appreciably reduced by the noise limiter and by the special crystal filter, a Hammarlund Patent developed by our engineers. Power hum is negligible. Additional features of design also contribute to the reduction of noise and other interferences. The automatic volume

control aids in keeping music and voice reception at the volume you desire.

A high degree of sensitivity, selectivity and stability is provided by the many especially designed features described in the following pages.

Other items of design are provided for those interested in the reception of telegraph and code signals. These include a stable Beat Frequency Oscillator for the reception of unmodulated or CW signals, an "S" or Signal Strength meter for noting the relative strength of received signals, and a Send-Receive switch which permits operation of a transmitter with a minimum of noise from the receiver.

All the way through, whether for Broadcast or Short Wave reception, this Hammarlund HQ-129-X Receiver is designed and built for high quality performance and for durability.

DESIGN

PRE-SELECTION

The pre-selection or tuned R.F. stage for each band of this receiver is designed for high performance. Entirely individual tuning coils are used for each band. These along with the multi-section variable condenser permit the proper LC ratio for best performance to be used with each band. Both grid and plate circuits are tuned. A compensating condenser, adjustable from the front of the panel, provides perfectly aligned input circuits with any given antenna system. Some antenna suggestions are given on page 14.

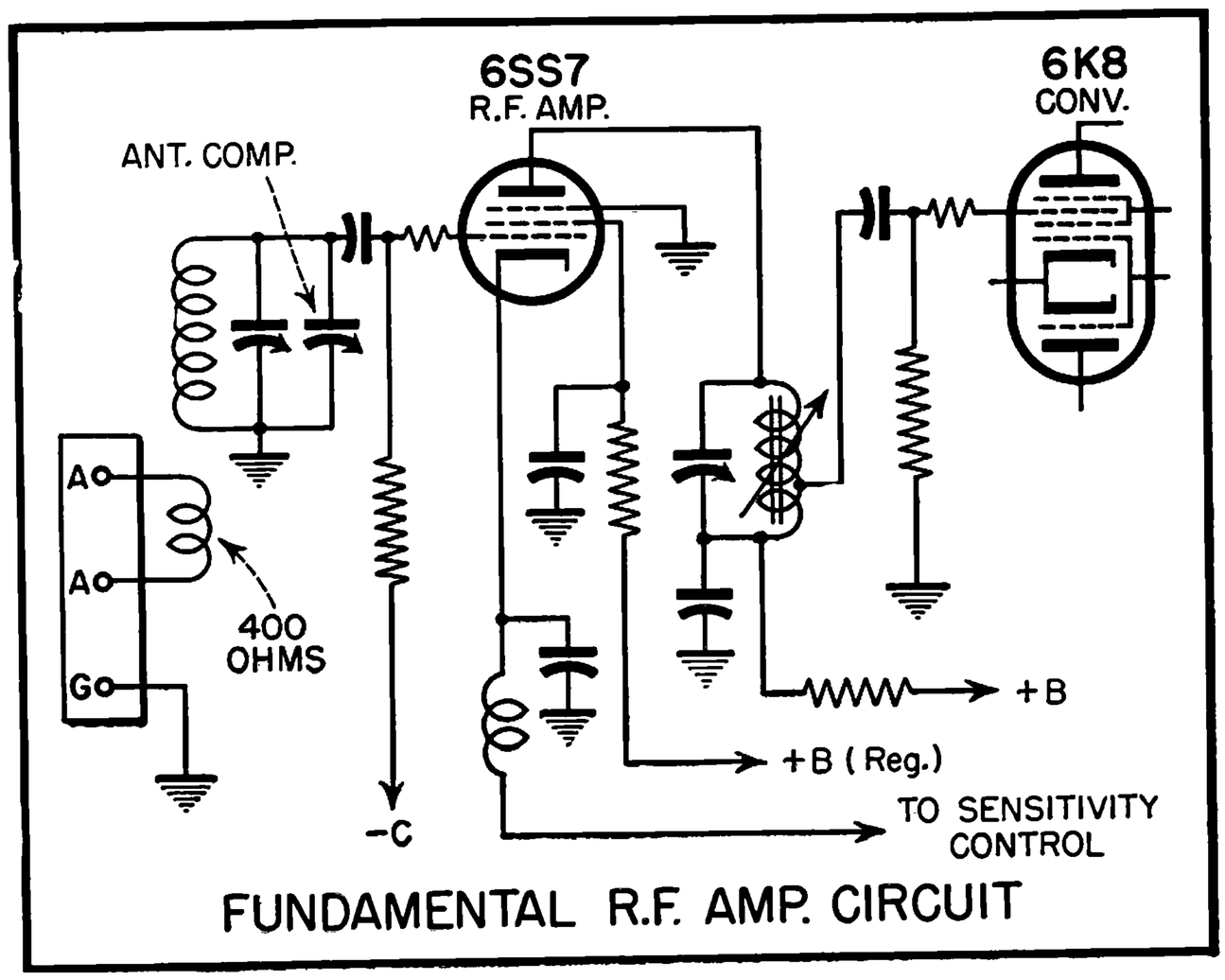

Fig. 2—Tuned R.F. amplifier and converter. Careful circuit design improves signal-to-noise ratio.

These features of design provide high selectivity and high gain and afford maximum signal-to-noise ratio and maximum image signal rejection.

TUNING RANGES

Band	*Frequency*	*Meters Wave Length*
1	540 —1320 KC	555 —227
2	1.32—3.2 MC	227 —93.7
3	3.2 —5.7 MC	93.7—52.6
4	5.7 —10 MC	52.6—30.0
5	10 —18 MC	30 —16.7
6	18 —31 MC	16.7—9.7

TUBE LINE-UP

Symbol		*Type*	*Function*
V-1	6SS7	Triple-Grid Super Control Amplifier, Single Ended	R.F. Amplifier
V-2	6K8	Triode-Hexode Converter	Converter or 1st Detector and Oscillator
V-3	6SS7	See Above	1st I.F. Amplifier
V-4	6SS7	See Above	2nd I.F. Amplifier
V-5	6SS7	See Above	3rd I.F. Amplifier
V-6	6H6	Twin Diode	Detector and Noise Limiter
V-7	6SN7GT/G	Twin Triode Amplifier	1st Audio Amplifier and "S" Meter Tube
V-8	6V6GT/G	Beam Power Amplifier	Audio Power Amplifier and output Tube
V-9	6SJ7	Triple Grid Tube	Beat Frequency Oscillator
V-10	5U4G	Full Wave Rectifier	Rectifier
V11	0C3/VR105	Voltage Regulator	Voltage Regulator

BAND SPREAD

An exceptionally wide band spread of 310 degrees supplied by a special 9 section condenser, is provided on the 4 higher frequency ranges. The band spread dial has 5 scales. Four of these are directly calibrated for the 80, 40, 20 and 10 meter amateur bands. The fifth

scale is an arbitrary 0-200 division scale, provided for making up calibration charts for other bands, such as the short wave international broadcast bands. It is also of use in logging stations.

The following table shows the approximate frequency range that can be covered by the band spread dial at different points on each of the 4 higher frequency bands.

Band	*Low End*	*Middle*	*High End*
3.2 MC— 5.7 MC	.4 MC	.7 MC	1.25 MC
5.7 MC— 10 MC	.2 MC	.5 MC	.9 MC
10 MC— 18 MC	.2 MC	.5 MC	.9 MC
18 MC— 31 MC	.6 MC	1.2 MC	2.2 MC

It should be noted that the Main Tuning dial has been calibrated with the Band Spread dial set at 200 which corresponds to minimum band spread capacity included in the circuit. To use band spread tuning, the Main Tuning dial should be set at the high frequency end of the desired band with the Band Spread dial set at 200. Lower frequencies such as those in the above table will then be obtained as the Band Spread dial setting is decreased.

CONVERTER STAGE

This converter stage uses the triode-hexode 6K8 tube which becomes more efficient as the frequency increases. The design of this converter stage is such that the over-all RF gain is relatively constant and uniform over the whole range of the receiver. This provides uniform operation and provides a true indication of signal strength, as shown on the "S" meter, over all the bands.

The stability of the oscillator is insured by a drift compensator, by low loss tube sockets, and by a ceramic oscillator switch section. It is

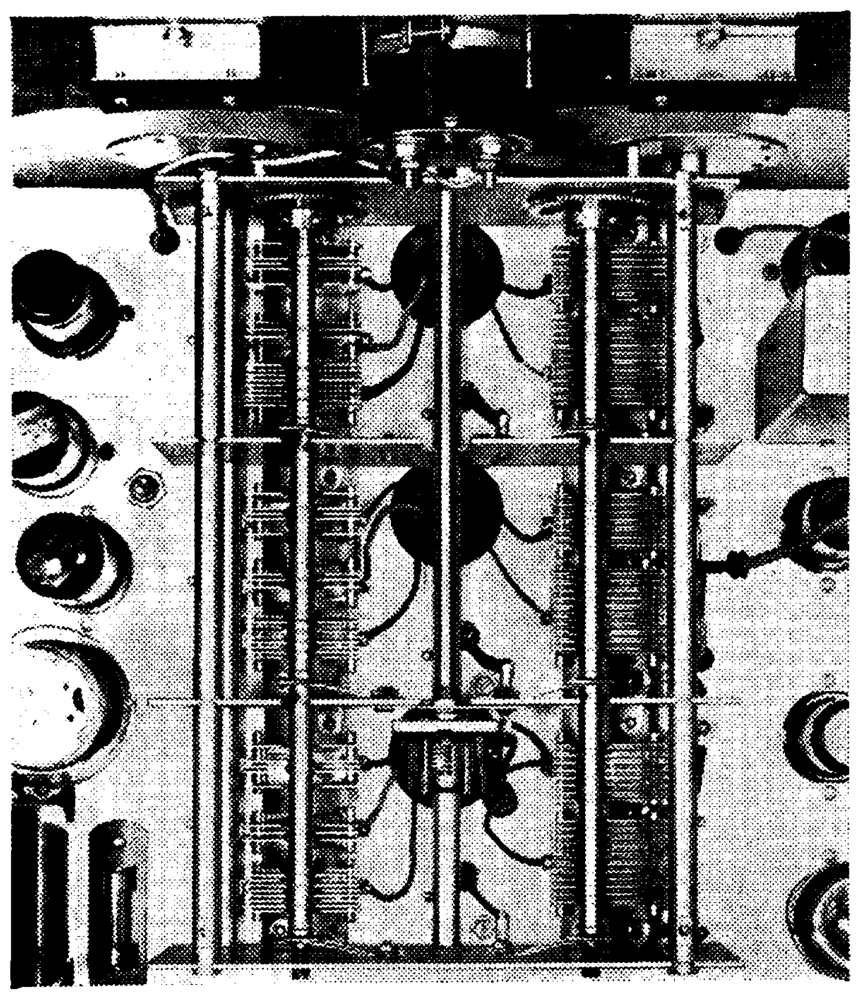

Fig. 3—Precision H.F. tuning assembly.

further insured by its operation from a controlled voltage circuit which uses the OC3/VR-105 Voltage Regulator tube to keep the voltages constant regardless of line voltage fluctuation.

All these factors aid in maintaining the accuracy of the calibration of the receiver.

CRYSTAL FILTER AND PHASING CIRCUIT

The patented crystal filter included in the HQ-129-X Receiver is an outstanding Hammarlund development. Five degrees of selectivity, selected by a six-position panel control, are provided for reducing interference. Steps 1, 2, and 3, varying from broad to fairly sharp, may normally be used for phone reception, depending upon the degree of fidelity desired. Steps 4 and 5, giving sharper selectivity, may be used for CW code reception. The "OFF" position of the control cuts out the crystal filter when broadest selectivity or highest fidelity is desired. The curves of Fig. 5, indicate the degrees of broadness or sharpness that may be obtained.

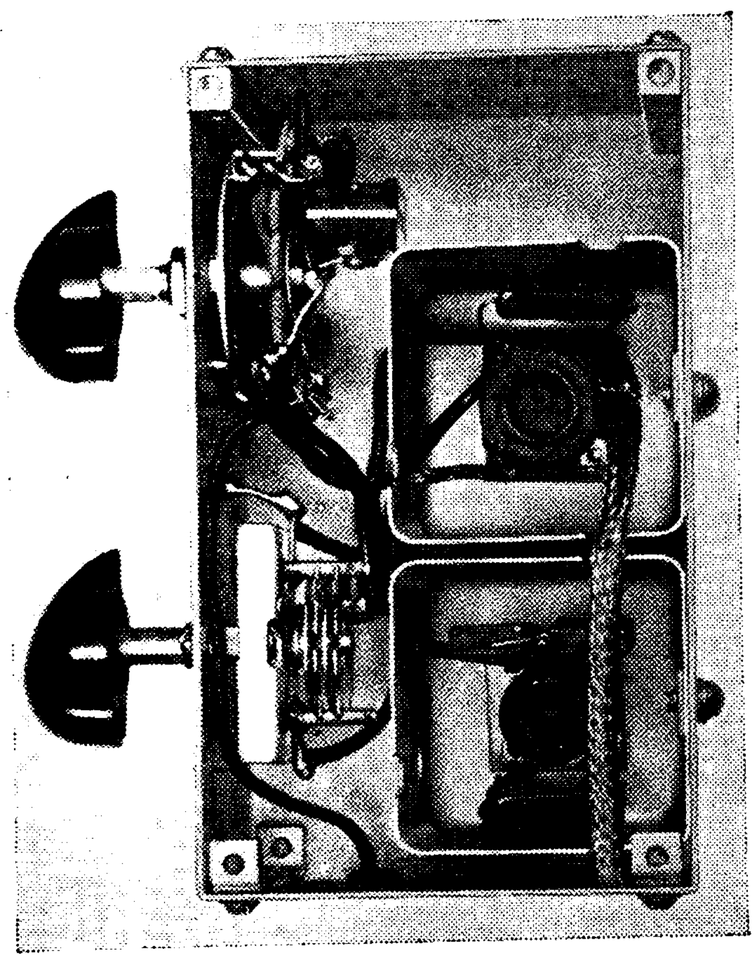

Fig. 4—Crystal Filter unit.

Along with the crystal filter, a phasing control is provided to eliminate interfering heterodynes, within limits. Fig. 5, is a schematic diagram of the filter and phasing circuit. The complete unit is shown in Fig. 4.

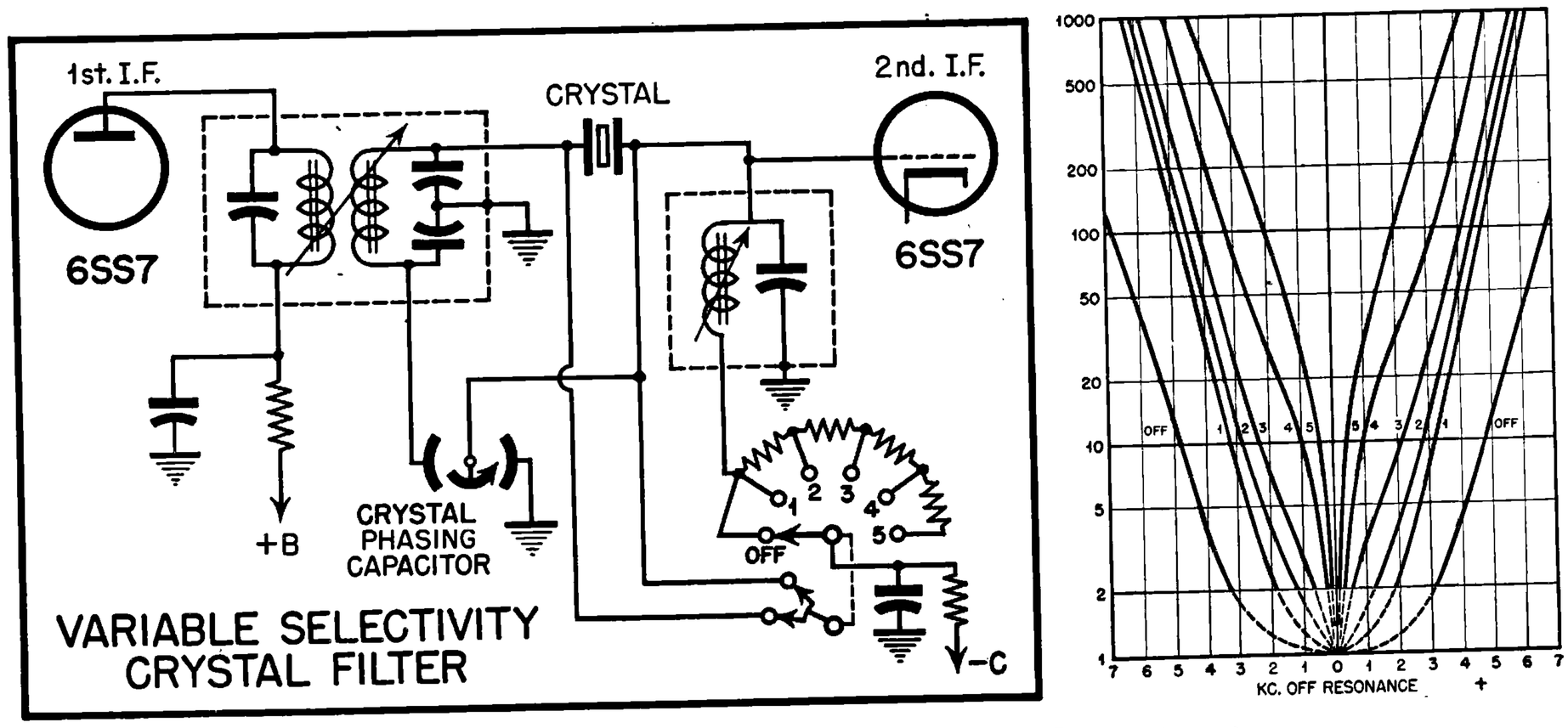

Fig. 5—Selectivity curve and crystal filter circuit.

The over-all gain of the receiver is not noticeably affected by the changes in selectivity of the filter nor is the reading of the "S" Meter appreciably affected.

I. F. AMPLIFIER

Three stages of I.F. amplification are provided. The gain per stage is purposely made low, in order to maintain stability. Iron core permeability-tuned transformers are used for improved performance and for ease of adjusting. Silvered mica condensers are used in each transformer circuit to improve its stability. The intermediate frequency is 455 KC—the R.M.A. standard frequency.

Over-all selectivity curves for this amplifier and the crystal filter are shown in Fig. 5.

A.V.C. SYSTEM

The automatic volume control system in the HQ-129-X gives remarkably smooth operation. The RF stage and the first two I.F. stages are automatically controlled. A switch is provided for shifting from AVC to manual control, when so desired.

SECOND DETECTOR

One section of a 6H6 tube is used for the second detector and for the A.V.C. system. This system is well designed and produces a minimum of distortion.

NOISE LIMITER

The other section of the 6H6 tube is employed as a noise limiter. It is designed to reduce automobile ignition interferences and other similar disturbances to a negligible amount. Its operation does not affect the intelligibility of the received signals, and it may be switched off when so desired.

"S" METER

The signal strength "S" meter which is operated from one section of the 6SN7 Tube shows the relative signal strength of the received signal. The dial is calibrated in units of 1 to 9. Each division represents a doubled signal strength over the previous division. For example, if division 6 corresponds to approximately 6.25 microvolts at the antenna terminals, division 7 represents approximately 12.5 microvolts, 8 represents 25 microvolts, and 9 represents 50. Each division therefore represents a 6 DB step. This relative sensitivity of the meter can be adjusted. In production it is arbitrarily adjusted to a reading

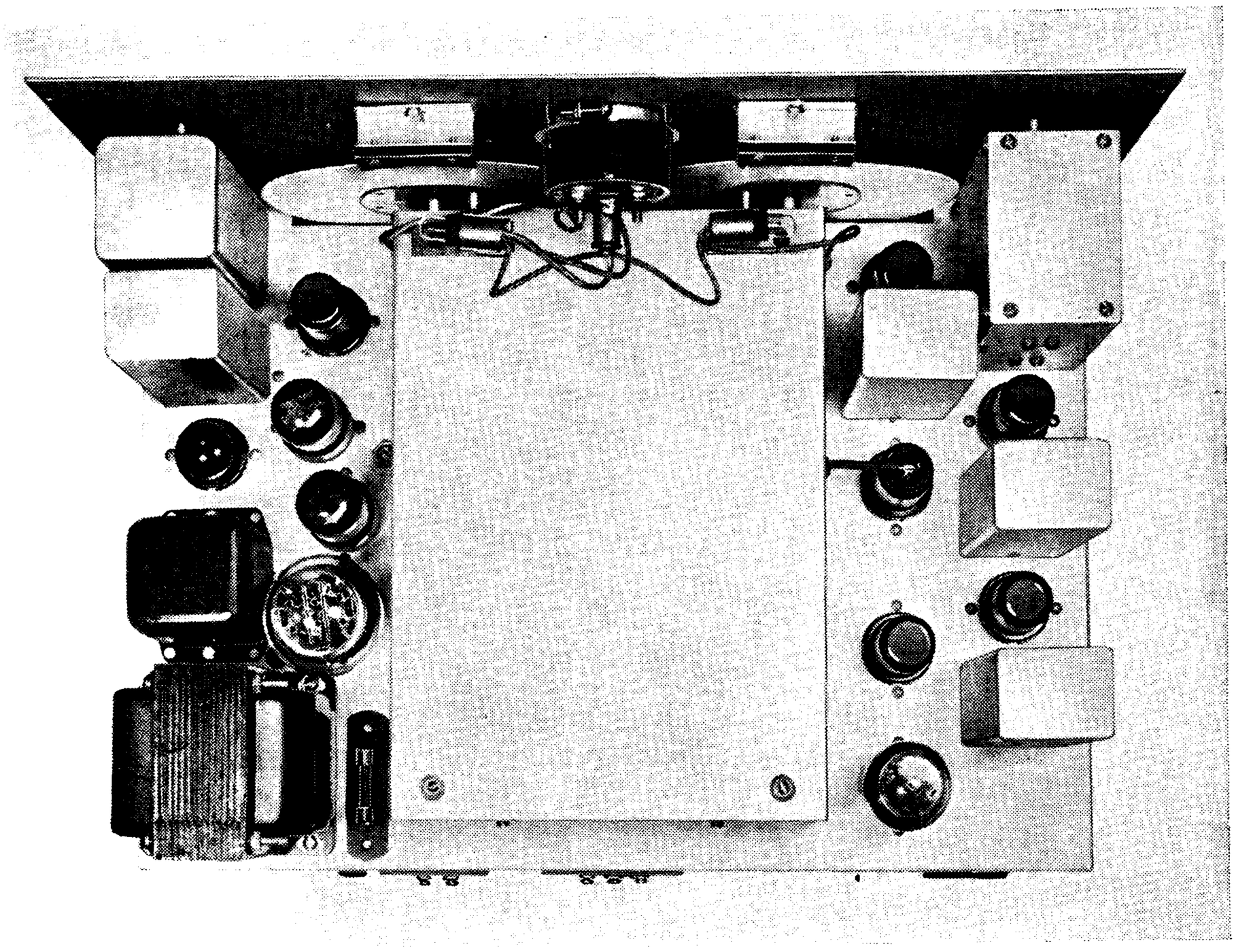

Fig. 6—Top view showing chassis layout.

of 9 for an input of approximately 50 microvolts. Should this not correspond with your previous experience with a strength 9 signal, readjust the slotted shaft, located near the 6V6 and the 6SN7 tubes, as shown on the chart in Fig. 8.

BEAT FREQUENCY OSCILLATOR

The Beat Frequency Oscillator is designed for the reception of CW or unmodulated code signals. The control on the front panel provides a wide selection of beat frequencies for the best tone to cut through any interfering signals. The oscillator is of the electron coupled type, has excellent stability, and is designed to have no material affect on the operation of the I.F. Amplifier. A switch is provided for turning this oscillator on or off at will.

AUDIO AMPLIFIER

The first stage of the audio amplifier is a resistance coupled triode voltage amplifier using one section of the twin triode 6SN7 tube. The final stage uses a 6V6 Beam Power amplifier Tube and supplies an undistorted power output of approximately 3 watts. An output transformer with an output impedance of 6 ohms is used to connect directly to the voice coil of a suitable permanent magnet type dynamic

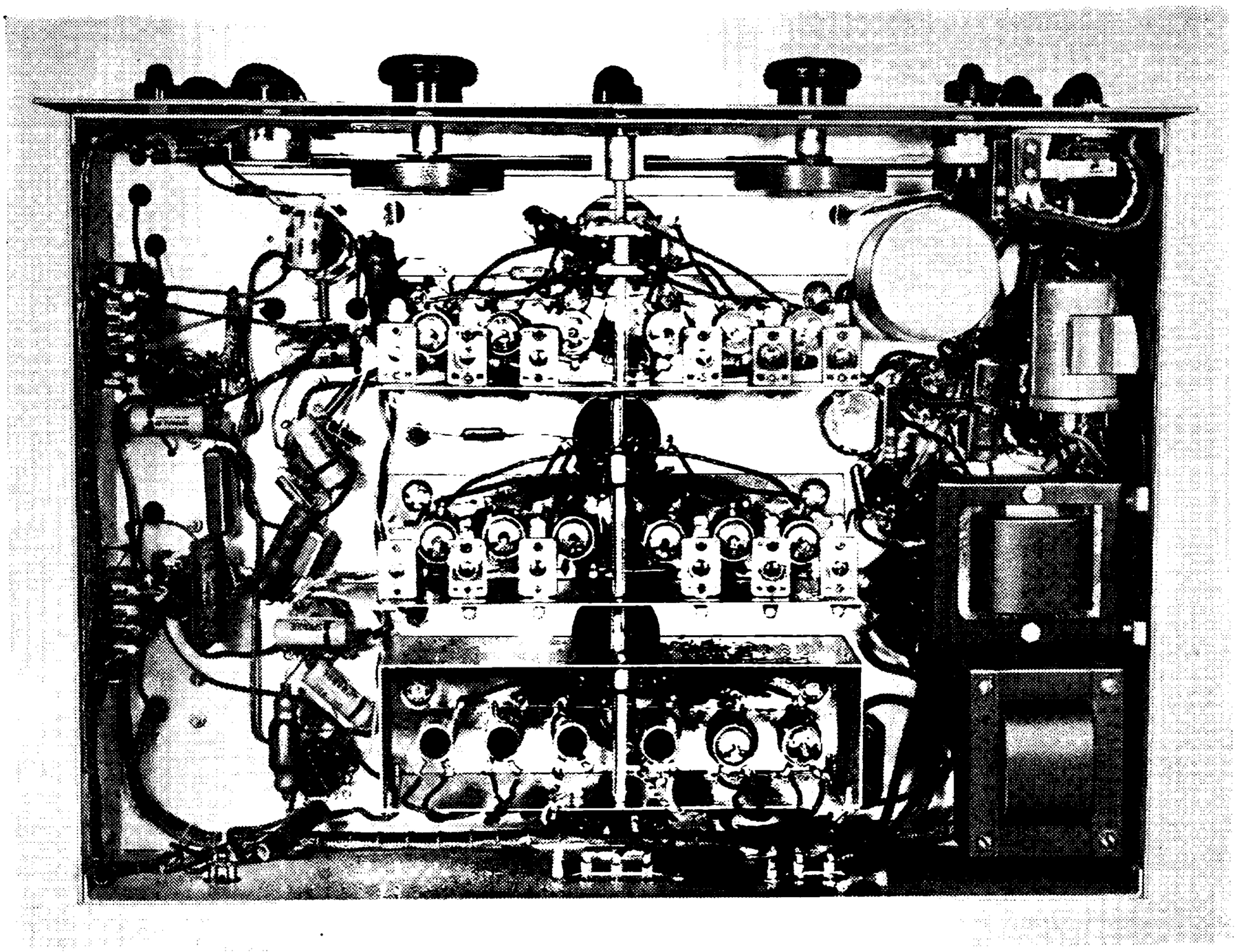

Fig. 7—Bottom view showing placement of parts.

speaker. A phone jack is connected across the same output and disconnects the speaker when headphones are plugged in. A manual gain control is provided.

POWER SUPPLY

All components of the power supply have a very large safety factor in order to insure satisfactory operation over a long period of time. A two-section filter is employed with a total inductance of 40 henries and a total capacitance of 30 microfarads. This heavy duty filter provides humless operation.

CONSTRUCTIONAL DETAILS

In designing the HQ-129-X, HAMMARLUND engineers have gone to considerable length to turn out a receiver that will stand up under various types of service and give years of satisfactory performance. Fig. 6 and Fig. 7, are the top and bottom views of the receiver showing general construction and parts layout. Fig. 3, is the top view with the cover of the tuning capacitor assembly removed.

To the right are the main tuning capacitors and to the left are the band spread capacitors. The small capacitor in the center with the

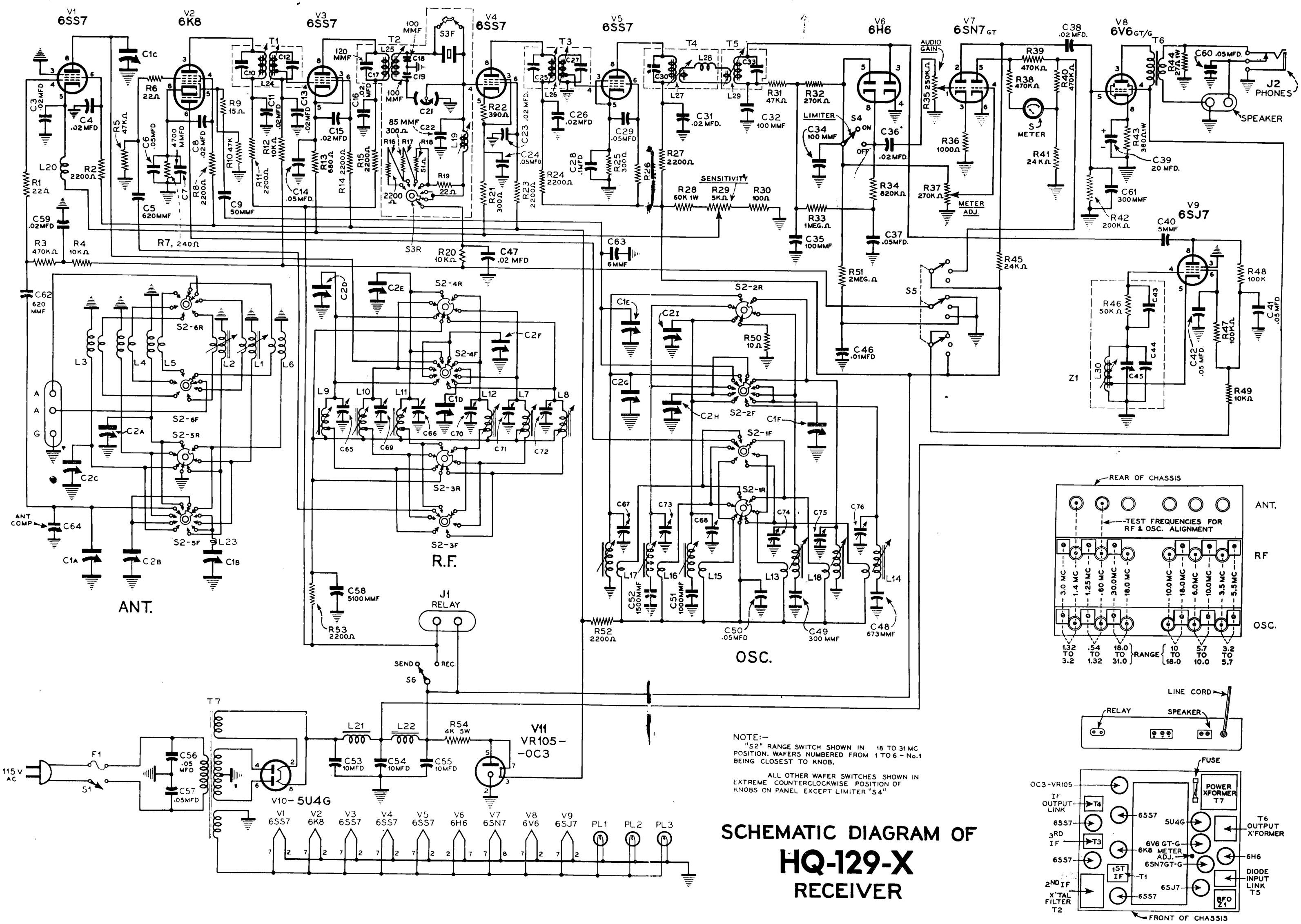

Fig. 8 Circuit diagram.

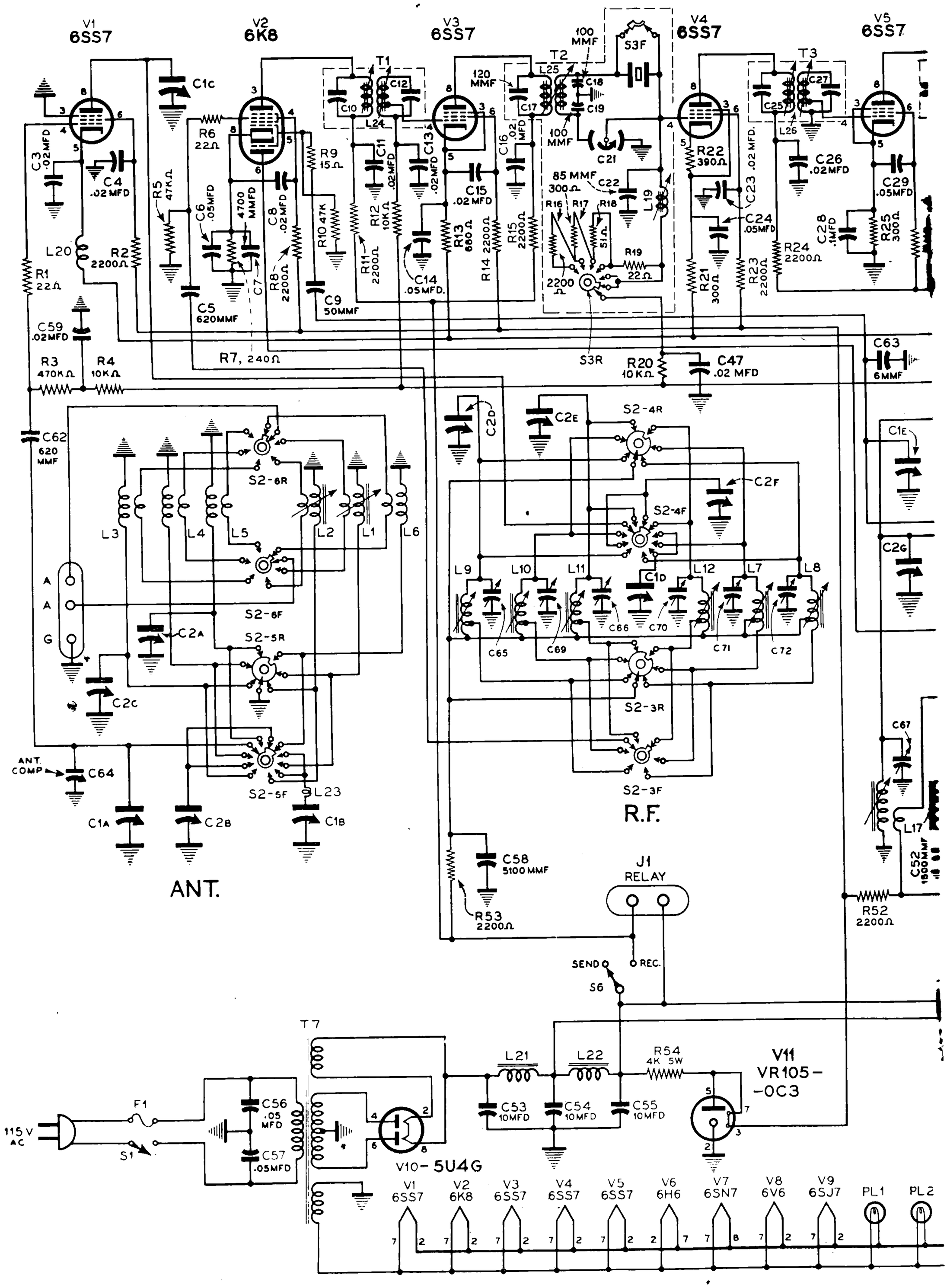
V1 6SS7
V2 6K8
V3 6SS7
V4 6SS7
V5 6SS7
T1
T2
T3
S3F
S3R
R.F.
ANT.
J1 RELAY
SEND
REC.
S6
T7
V10-5U4G
V11 VR105-OC3
115 V AC
F1
S1
V1 6SS7
V2 6K8
V3 6SS7
V4 6SS7
V5 6SS7
V6 6H6
V7 6SN7
V8 6V6
V9 6SJ7
PL1
PL2

Fig. 8—

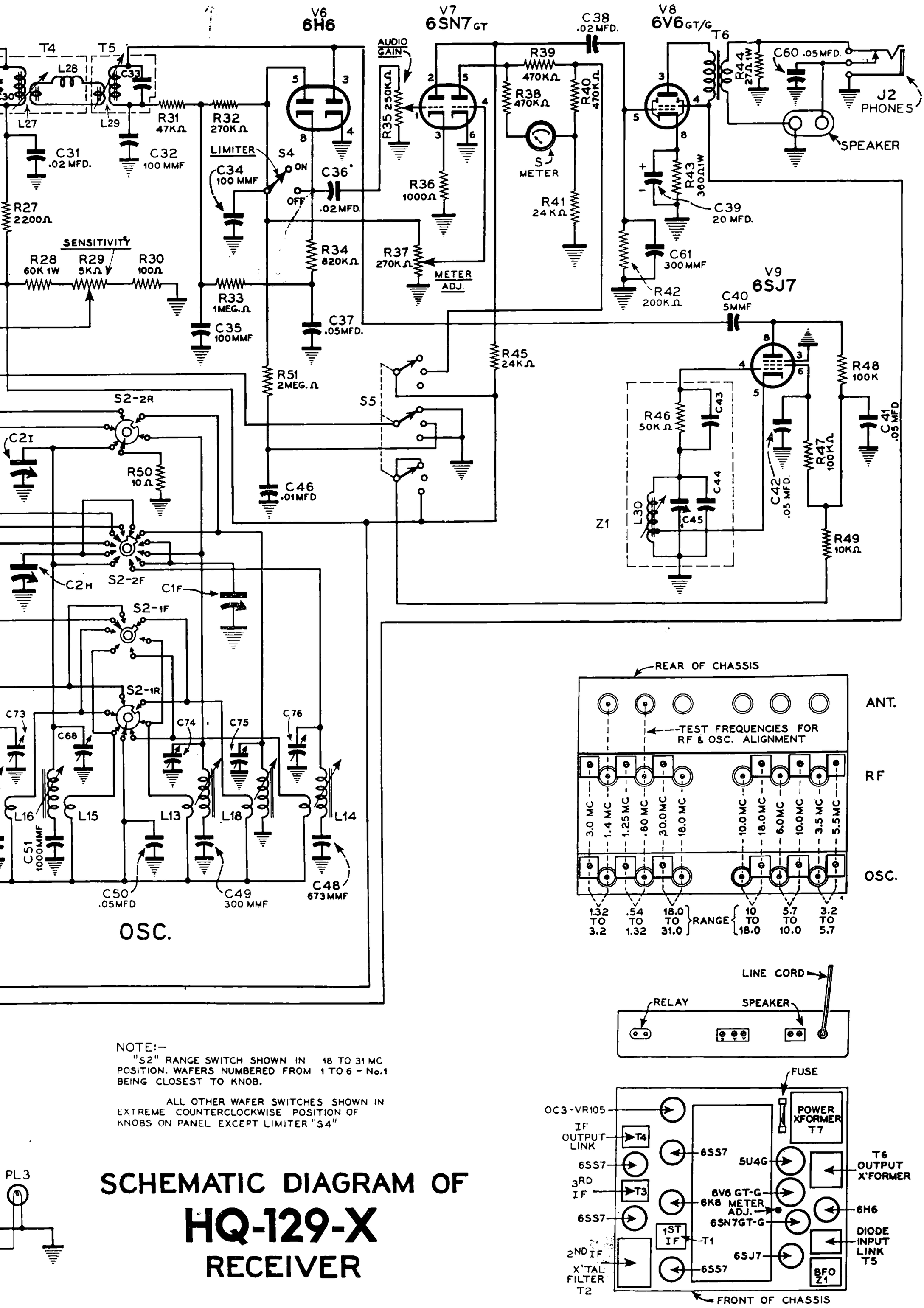

NOTE:—
"S2" RANGE SWITCH SHOWN IN 18 TO 31 MC POSITION. WAFERS NUMBERED FROM 1 TO 6 – No.1 BEING CLOSEST TO KNOB.

ALL OTHER WAFER SWITCHES SHOWN IN EXTREME COUNTERCLOCKWISE POSITION OF KNOBS ON PANEL EXCEPT LIMITER "S4"

SCHEMATIC DIAGRAM OF HQ-129-X RECEIVER

Circuit diagram.

extended shaft is the antenna compensator. The solid silver contacts can be seen along the rotor shafts of the capacitors. There are three sets of dual silver-to-silver contacts making six for each unit. The solid silver contacts maintain symmetry and insure perfect electrical contact without noise.

The tuning capacitors are driven by special dial arrangements which have 9 to 1 ratio knobs. On the knob shaft behind the front panel is a heavy flywheel to aid in ease of tuning. Just a twist of the knob will make the dial coast a considerable distance. The dials are operated by friction drive. Each dial mechanism connects with the shaft of its capacitors through two gears, one of which is the split type with anti-backlash springs.

Three pilot lights conveniently illuminate the tuning dials and "S" Meter. These are located so that bulbs can be easily replaced.

The panel does not support any of the critical components. Any pressure that may be exerted on the panel will not appreciably affect the adjustment of the receiver.

The 18 tuning inductors, precision wound on low-loss forms, employ both the inductive and capacitive methods of trimming in order to assure perfect circuit alignment.

Thorough shielding and proper placement of components assure a high degree of stability.

OPERATION

After unpacking the rceeiver, check the tubes to make sure that all are properly fitted into their respective socket and that the grid clip is in place on top of the 6K8 tube.

This receiver, unless it is a special model, operates on 105 to 125 volts AC at 50 to 60 cycles. If you are uncertain as to the type of power available for operating the receiver, check with your local power company office. Next connect the antenna and the speaker to the receiver (see chapter on antenna requirements). Two wires from the permanent magnet dynamic speaker connect to the two terminals on the rear of the chassis marked "SPEAKER." The power supply switch that turns the receiver on and off is operated in conjunction with the "AUDIO GAIN" control. Advance this control and while the tubes are heating, set the "MEGACYCLE" switch in the .54-1.32 position, "MAN-AVC-BFO" on AVC, "CRYSTAL SELECTIVITY" on OFF, "SEND-REC." on REC. and "SENSITIVITY" in the extreme clockwise or highest position. Tune in the broadcast stations by using the "MAIN TUNING" dial and the "AUDIO GAIN" control.

For accurate tuning it will be necessary to watch the "S" meter,

which has already been described. The "MAIN TUNING" control should be adjusted for maximum reading of the meter on the station to which you are listening. The ANTENNA COMPENSATOR control, the final adjustment, also should be set for maximum meter reading.

When automatic volume control is not desired the "MAN-AVC-BFO" switch can be set on MAN (Manual), the "AUDIO GAIN" control turned fully clockwise, and the "SENSITIVITY" control employed to provide the desired volume. Headphones may be plugged into the jack in the lower right hand corner of the panel, which action disconnects the speaker. On the rear of the chassis are two pin jacks marked "RELAY" which can be connected to a send-receive relay for break-in operation. With the "SEND-REC" switch on SEND, the receiver is silent but ready for instant use.

Page 4 gives the tuning ranges of each band and its coverage. There is a band spread of 310 degrees for bands 3, 4, 5 and 6, with individual scales for each amateur band and an arbitrary scale, 0-200, for more general use. See Page 5 for more complete information.

The BEAT FREQUENCY OSCILLATOR CONTROL provides a wide choice of tones for CW code operation. Turning the "MAN-AVC-BFO" switch to BFO disconnects the automatic volume control, and the SENSITIVITY control must then be employed. It is often a great help to use the "LIMITER" in short wave reception.

The "PHASING" control normally is set at the arrow in the center of its scale, but may be adjusted to cut out interference from stations on either side of the signal. With the "CRYSTAL SELECTIVITY" switch the operator can choose the degree of selectivity that provides the greatest fidelity with minimum interference. The first three positions are for phone reception and the fifth and sixth for single signal code reception in extremely crowded bands.

To make use of the high degree of accuracy available with the calibrated "BAND SPREAD" dial tune to an oscillator or station of known frequency within the amateur band being used. Set the "BAND SPREAD" dial exactly to the frequency of the station or oscillator, then adjust the "MAIN TUNING" dial to zero beat the signal. The "MAIN TUNING" dial will be slightly off frequently since the "BAND SPREAD" control is designed to tune beyond the legal limits of the band at either end. This is an advantage especially if marker stations are used as calibration references.

For example, the "MAIN TUNING" dial is set at 4.014 mc. for the 80 meter band, 7.32 mc. for the 40 meter band, 14.47 mc. for the 20 meter band, and 30.04 mc. for the 10 meter band. These figures are not exactly true for all receivers. However, they will serve as a

guide in setting the "MAIN TUNING" dial where no signal of known frequency is available.

ANTENNA SUGGESTIONS

Because of the high sensitivity of the HQ-129-X receiver, the antenna is usually not critical. Often an indoor wire 20 to 50 feet long, strung along the base board or along the ceiling molding of a room will give surprisingly good reception. A long single wire outdoor antenna, such as shown in Fig. 9, will generally give entirely satisfactory reception. This wire may be 50 to 75 feet long. The more isolated this antenna is from neighboring objects the better the reception will be.

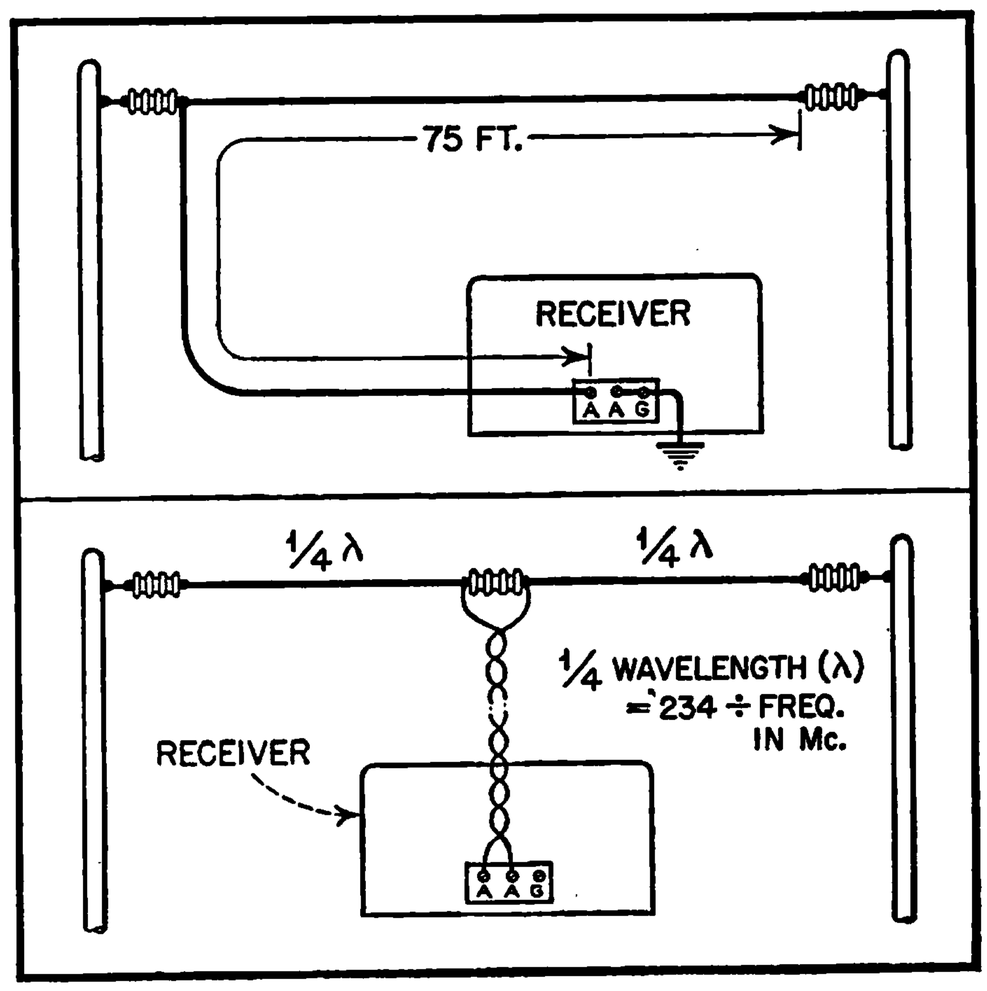

Fig. 9—Antenna suggestions.

In locations where the noise level, such as from motors and other electrical appliances, is high a simple doublet antenna, such as shown in Fig. 9 is often more satisfactory than the single wire antenna. For general reception over all bands each section of the doublet may be from 20 to 50 feet long. Where it is desired to increase the efficiency of reception over a particular band, the best length in feet for each section of the doublet is a quarter wave length, obtained by dividing 234 by the frequency in megacycles. The down lead may be a loosely twisted pair of insulated wires or a twisted pair such as is sold for "all wave" broadcast antennas.

The ground connection also is generally not critical. This receiver is grounded to the power supply and this is usually satisfactory. Sometimes a direct ground will increase the signal pick-up or decrease the noise pick-up. A direct ground can be made by running a wire to a radiator or water pipe or to a pipe driven into moist ground.

REALIGNMENT PROCEDURE—I.F. AMPLIFIER

Tuning of the intermediate-frequency transformers is accomplished by the use of iron-core permeability-tuned coils together with fixed

silvered-mica capacitors, resulting in a very high degree of stability. This, together with the mechanical arrangement provided, precludes the possibility of any appreciable drift or change of setting. Therefore, re-alignment should not be necessary, except when parts are replaced which would affect tuning of the I.F. circuits (like I.F. transformer or crystal).

Alignment of the I.F. channel should not be attempted unless suitable equipment is on hand. Proper alignment is accomplished by the visual method employing a cathode-ray oscilloscope used in conjunction with a frequency-modulated (swept) signal generator, having a fairly constant output. The oscilloscope should be externally synchronized by the signal generator.

The transformers must be tuned for symmetry and proper coincidence of the visible curves, as well as for amplitude. This requires a stage-by-stage alignment, starting with the Diode Input Link Transformer (T5) and continuing back through the First I.F. Transformer (T1). The procedure is as follows:

1) Set the Main Tuning capacitor to .54 M.C. and the band-switch to .54-1.32 M.C., the Send-Receive switch to Receive, the Limiter "off", the MAN-AVC-BFO switch to MAN position and the Crystal Selectivity switch to "off" position.

2) Now, with the generator set at 455 K.C. and applying the signal to the grid (pin #4) of the Third I.F. tube (V5), adjust the plate inductor (L27) of the I.F. Output Link (T4) and the Diode Input inductor (L29) of the Diode Input Link (T5), alternately, to obtain maximum amplitude, symmetry and pattern coincidence on the oscilloscope.

3) Apply the signal input lead to the grid (pin #4) of the 2nd I.F. tube (V4). Turn the two adjustment screws of the 3rd I.F. Transformer to obtain symmetrical, coinciding curve with as much amplitude as possible without disturbing the pattern.

4) Switch the signal input lead to the grid (pin #4) of the 1st I.F. tube (V3), and adjust the lower (plate) inductor (L25) of the Crystal Filter (T2) for maximum amplitude at center of curve.

5) Apply the signal input to the grid cap of 6K8 mixer tube (V2). Adjust screws of 1st I.F. Transformer (T1) as in (3). This should result in a tall selectivity curve with a slightly flattened peak.

6) Turn Crystal Selectivity switch to position #1, set Crystal Phasing pointer on arrow, and adjust the upper (grid) inductor (L19) of the Crystal Filter (T2) for maximum amplitude and

symmetry. Adjust signal input or receiver Sensitivity control to prevent overloading.

7) Switch Crystal Selectivity to position #2 and adjust Phasing control slightly from the arrow position, if necessary, to obtain identical images.

Adjust the signal generator frequency to obtain coincidence of the images, and if complete coincidence is not obtained, alternately make slight adjustments of the phasing control and the signal generator frequency, until images coincide.

These last steps have determined the exact frequency of the quartz crystal and the frequency setting of the signal generator should be left undisturbed.

8) Repeat carefully the complete I.F. alignment procedure (steps 1 through 7) for the crystal frequency.

R.F. AND H.F. OSCILLATOR

As in the case of the I.F. amplifier, the R.F. stage and the H.F oscillator were accurately aligned at the factory with the aid of calibrated oscillators that are frequently compared with standard frequency crystals. These circuits are designed to insure permanence of adjustment and should not be disturbed unless it is positive that readjustment is necessary.

The front row of adjustments, shown on the chart (Fig. 8), control the H.F. Oscillator circuits and consequently the dial calibration. To check these adjustments the band spread dial must be at 200, since that is the setting at which the main dial was calibrated. An accurate test oscillator is necessary. Connect the test oscillator to the antenna terminals and set it and the MAIN TUNING dial at the frequency indicated on the chart. The inductance is adjusted at a low frequency and the trimmer at a high frequency in each band, each being adjusted for maximum response. Generally a small fraction of a turn will suffice. These adjustments mutually affect each other. Therefore, if much change is made at one end of a band, the other end of the same band must be readjusted. This procedure must be repeated until further readjustment at either end is unnecessary.

The adjustments in the middle row control the mixer input circuits. To adjust these, set the oscillator to the frequency indicated on the chart and tune it in on the receiver. Employing an output meter, make the adjustments for peak meter readings. At 30 mc. there is a certain amount of interlocking between the detector and

H.F. oscillator making it necessary to rock the tuning capacitor back and forth while adjusting the trimmer capacitor, in order to avoid a false setting.

MAINTENANCE

The HQ-129-X receiver should give years of satisfactory service without need for repair. The first source of trouble is most likely to be the tubes and in case of failure, they should be checked by a reliable technician. The second most common source of trouble is found in the large assortment of small resistors and capacitors.

The chart below, Fig. 10, gives the values of the voltages between the tube socket terminals and ground or B- negative side of the circuit. The meter scale that should be used for making the check is shown in parenthesis below the voltage. A meter having a resistance of 1000 ohms per volt should be used. Small variations in voltages do not indicate trouble. With the aid of this chart and the circuit diagram (Fig. 8) the ailing capacitor or resistor can be found. The parts list in the back of this book gives the values of the parts and the HAMMARLUND part numbers. Some of them are standard items and can be obtained in the open market. Non-standard parts can be obtained by writing to the factory.

LINE VOLTAGE 115V. A.C. — SENSITIVITY MAX. SWITCH ON MAN. NO SIGNAL — Limiter-off — Audio Gain Max. — Send Receive on Receive — SWITCH ON AVC BFO

TUBE	RF 6SS7	Conv. 6K8	1-1F 6SS7	2-1F 6SS7	3-1F 6SS7	Detector Limiter 6H6	Output 6V6	Rectifier 5U4G	Reg. VR-105		1st Audio 6SN7-GT/G	BFO 6SJ7
Pin 1 to ground.....	...	...	...	...	...	...	...	Tie Point 212 (300)	Tie Point 93 (150)	...	...	...
Pin 2 to ground.....	...	...	...	...	...	6.2 A.C.	...	300 (750)	...	...	113 (150)	...
Pin 3 to ground.....	...	210 (300)	6.3 (15)	4.3 (15)	3.5 (15)	—0.4 (15)	254 (300)	Tie Point 212 (300)	Tie Point 108 (150)	...	3.6 (15)	...
Pin 4 to ground.....	...	91 (150)	...	...	...	...	268 (300)	280 A.C.	Tie Point 108 (150)	...	—0.3 (15)	—2.3 (15)
Pin 5 to ground.....	3.2 (15)	...	6.3 (15)	6.3 (15)	3.5 (15)	—0.2 (15)	...	...	108 (150)	...	5.6 (15)	...
Pin 6 to ground.....	102 (150)	98 (150)	105 (150)	105 (150)	97 (150)	Tie Point	Tie Point 210 (300)	280 A.C.	2.8 (15)	...	...	58 (150)
Pin 7 to ground.....	6.2 A.C.	6.2 A.C.	6.2 A.C.	6.2 A.C.	6.2 A.C.	...	6.2 A.C.	Tie Point 212 (300)	Tie Point 108 (150)	...	6.2 A.C.	6.2 A.C.
Pin 8 to ground.....	196 (300)	3.2 (15)	206 (300)	204 (300)	193 (300)	—0.2 (15)	14 (30)	300 (750)	Tie Point 108 (150)	...	...	34.5 (150)

Fig. 10

PARTS LIST HQ-129X

Schematic Designation	Description	HML'D. Part No.
	CAPACITORS	
C1, A-F	Main tuning, variable ..... (Part of SA-610)	
C2, A-I	Band-spread, variable ..... (Part of SA-610)	
C3, 4	Paper tubular, .02 uf 500 W.V.D.C.	23912-1
C5	Mica, 620 uuf 500 W.V.D.C.	23005-86B
C6	Paper tubular, .05 uf 500 W.V.D.C.	23912-2
C7	Mica, 4700 uuf 500 W.V.D.C.	23015-5B
C8	Paper tubular, .02 uf 500 W.V.D.C.	23912-1
C9	Silver mica, 50 uuf 500 W.V.D.C.	23002-11D
C10	Silver mica ..... (Part of T1, I.F. Transformer #6335)	
C11	Paper tubular, .02 uf 500 W.V.D.C.	23912-1
C12	Silver mica ..... (Part of T1, I.F. Transformer #6335)	
C13	Paper tubular, .02 uf 500 W.V.D.C.	23912-1
C14	Paper tubular, .05 uf 500 W.V.D.C.	23912-2
C15, 16	Paper tubular, .02 uf 500 W.V.D.C.	23912-1
C17	Silver mica, 120 uuf 500 W.V.D.C.	23003-96D
C18, 19	Mica, 100 uuf 500 W.V.D.C.	23001-48B
C21	Crystal phasing, variable	SA-604
C22	Silver mica, 85 uuf 500 W.V.D.C.	6180
C23	Paper tubular, .02 uf 500 W.V.D.C.	23912-1
C24	Paper tubular, .05 uf 500 W.V.D.C.	23912-2
C25	Silver mica ..... (Part of T3, I.F. Transformer #6335)	
C26	Paper tubular, .02 uf 500 W.V.D.C.	23912-1
C27	Silver mica ..... (Part of T3, I.F. Transformer #6335)	
C28	Paper tubular, 0.1 uf 500 W.V.D.C.	23912-3
C29	Paper tubular, .05 uf 500 W.V.D.C.	23912-2
C30	Silver mica, 95 uuf 500 W.V.D.C.	6195
C31	Paper tubular, .02 uf 500 W.V.D.C.	23912-1
C32	Mica, 100 uuf 500 W.V.D.C.	23001-48B
C33	Silver mica, 95 uuf 500 W.V.D.C.	6195
C34, 35	Mica, 100 uuf 500 W.V.D.C.	23001-48B
C36	Paper tubular, .02 uf 500 W.V.D.C.	23912-1
C37	Paper tubular, .05 uf 500 W.V.D.C.	23912-2
C38	Paper tubular, .02 uf 500 W.V.D.C.	23912-1
C39	Electrolytic, 20 uf 25 W.V.D.C. ..... (Part of 23840-1)	
C40	Silver mica, 5 uuf 500 W.V.D.C.	23002-1D
C41, 42	Paper tubular, .05 uf 500 W.V.D.C.	23912-2
C43	Silver mica ..... (Part of Z1, B.F.O. Assy. #26021-G1)	
C44	Silver mica ..... (Part of Z1, B.F.O. Assy. #26021-G1)	
C45	B.F.O., variable ..... (Part of Z1, B.F.O. Assy. #26021-G1)	SA-681
C46	Paper tubular, .01 uf 200 W.V.D.C.	23912-4
C47	Paper tubular, .02 uf 500 W.V.D.C.	23912-1
C48	Silver mica 673 uuf 500 W.V.D.C.	6061
C49	Silver mica 300 uuf 500 W.V.D.C.	23003-105D
C50	Paper tubular, .05 uf 500 W.V.D.C.	23912-2
C51	Mica, 1000 uuf 500 W.V.D.C.	23015-40B
C52	Mica, 1500 uuf 500 W.V.D.C.	23015-20B
C53,54,55	Electrolytic 10/10/10 uf 450 W.V.D.C. ... (Part of 23840-1)	
C56, 57	Paper tubular, .05 uf 500 W.V.D.C.	23912-2
C58	Mica, 5100 uuf 500 W.V.D.C.	23015-16B
C59	Paper tubular, .02 uf 500 W.V.D.C.	23912-1
C60	Paper tubular, .05 uf 500 W.V.D.C.	23912-2
C61	Mica 300 uuf 500 W.V.D.C.	23001-75B
C62	Mica 620 uuf 500 W.V.D.C.	23005-86B
C63	Ceramic N750K 6uuf 500 W.V.D.C.	23023-34
C64	Antenna Comp., variable ..... (Part of SA-610)	SA-617
C65-68	Trimmer, mica, 1.5 - 9 uuf	6189-G2
C-69-76	Trimmer, mica, 3-35 uuf	6055-G1

PARTS LIST HQ-129X—Cont.

Schematic Designation	Description	HML'D. Part No.
	CAPACITORS—Continued	
F1	Fuse, 2 amp. type 3AG	15928-7
J1	Relay jack	6142
J2	Phone jack	6087
	INDUCTORS	
L1	Antenna coil assembly .54-1.32 mc range	26051-G1
L2	Antenna coil assembly 1.32-3.2 mc range	26051-G2
L3	Antenna coil 3.2-5.7 mc range	6013
L4	Antenna coil 5.7-10 mc range	6016
L5	Antenna coil 10-18 mc range	6019
L6	Antenna coil 18-31 mc range	6022
L7	R.F. coil assembly .54-1.32 mc range	26047-G2
L8	R.F. coil assembly 1.32-3.2 mc range	26047-G1
L9	R.F. coil assembly 3.2-5.7 mc range	26047-G6
L10	R.F. coil assembly 5.7-10 mc range	26047-G5
L11	R.F. coil assembly 10-18 mc range	26047-G4
L12	R.F. coil assembly 18-31 mc range	26047-G3
L13	H.F. osc. coil assembly .54-1.32 mc range	26030-G2
L14	H.F. osc. coil assembly 1.32-3.2 mc range	26030-G1
L15	H.F. osc. coil assembly 3.2-5.7 mc range	26030-G6
L16	H.F. osc. coil assembly 5.7-10 mc range	26030-G5
L17	H.F. osc. coil assembly 10-18 mc range	26030-G4
L18	H.F. osc. coil assembly 18-31 mc range	26030-G3
L19	Crystal filter grid coil (Part of Assy. #SA788)	
L20	R.F. choke (CHX)	6181
L21	Filter choke	6083
L22	Filter choke	6084
L23	R.F. choke	26054-1
L24	1st I.F. coil (Part of T1, #6335)	
L25	Crystal filter plate coil (Part of Assy. #SA787)	
L26	3rd I.F. coil (Part of T3, #6335)	
L27	I.F. output coil (Part of T4, #SA797)	
L28	Series coupling coil (Part of T4, #SA797)	
L29	Diode input coil (Part of T5, #SA799)	
L30	B.F.O. coil (Part of Z1, #26021-G1)	
M1	"S" meter	4903
PL1, 2, 3	Pilot lamp #47 6.3 V., .15 amp.	16004
	RESISTORS	
R1	22 ohms, ½ W.	19302-9
R2	2200 ohms, ½ W.	19301-40
R3	470,000 ohms, ½ W.	19301-96
R4	10,000 ohms, ½ W.	19301-56
R5	47,000 ohms, ½ W.	19301-72
R6	22 ohms, ½ W.	19302-9
R7	240 ohms, ½ W.	19302-34
R8	2200 ohms, ½ W.	19301-40
R9	15 ohms, ½ W.	19302-5
R10	47,000 ohms, ½ W.	19301-72
R11	2200 ohms, ½ W.	19301-40
R12	10,000 ohms, ½ W.	19301-56
R13	680 ohms, ½ W.	19301-28
R14,15,16	2200 ohms, ½ W.	19301-40
R17	300 ohms, ½ W.	19301-196
R18	51 ohms, ½ W.	19301-187
R19	22 ohms, ½ W.	19302-9
R20	10,000 ohms, ½ W.	19301-56

PARTS LIST HQ-129X—Cont.

Schematic Designation	Description	HML'D. Part No.
	RESISTORS—Continued	
R21	300 ohms, ½ W.	19301-196
R22	390 ohms, ½ W.	19301-22
R23, 24	2200 ohms, ½ W.	19301-40
R25	300 ohms, ½ W.	19301-196
R26	47,000 ohms, 1 W.	19303-61
R27	2200 ohms, ½ W.	19301-40
R28	60,000 ohms, 1 W.	19310-231
R29	Potentiometer, 5,000 ohms	15305-4
R30	100 ohms, ½W.	19301-8
R31	47,000 ohms, ½ W.	19301-72
R32	270,000 ohms, ½ W.	19301-90
R33	1 Meg ohms, ½ W.	19301-104
R34	820,000 ohms, ½ W.	19301-102
R35	Potentiometer, 250,000 ohms (Switch Attached)	15356-1
R36	1,000 ohms, ½ W.	19301-32
R37	Potentiometer, 270,000 ohms	15357-1
R38,39,40	470,000 ohms, ½ W.	19301-96
R41	24,000 ohms, ½ W.	19301-213
R42	200,000 ohms, ½ W.	19301-220
R43	360 ohms, 1 W.	19305-38
R44	27 ohms, 1 W.	19305-11
R45	24,000 ohms, 1 W.	19310-187
R46	50,000 ohms (Part of Z1, B.F.O. Assy. #26021-G1)	
R47, 48	100,000 ohms, ½ W.	19301-80
R49	10,000 ohms, ½ W.	19301-56
R50	10 ohms, ½ W.	19302-1
R51	2 meg. ohms, ½ W.	19301-169
R52, 53	2200 ohms, ½ W.	19301-40
R54	4,000 ohms, 5 W., wire wound	19380-47
	SWITCHES	
S1	(Part of R29, potentiometer #15305-4)	
S2-1 F.R	H.F. Osc. Plate	6331
S2-2 F,R	H.F. Osc. Grid	6332
S2-3 F,R	Det. Grid Tap	6064
S2-4 F,R	R.F. Plate	6063
S2-5 F,R	R.F. Grid	6063
S2-6 F,R	Antenna	6062
S3 F,R	Crystal filter assy.	26035-G1
S4	Limiter	6333
S5	MAN-AVC-BFO	6097
S6	Send-Rec.	6333
	TRANSFORMERS	
T1	1st I.F.	6335
T2	Crystal filter assy. (2nd I.F.)	SA785
T3	3rd I.F.	6335
T4	I.F. output coil assy. (Link)	SA797
T5	Diode input coil assy. (Link)	SA799
T6	Audio output transformer	6086
T7	Power transformer	26012
X1	Quartz crystal	6338
Z1	B.F.O. assembly	26021-G1

Printed in U.S.A. Form 2-7-3, 446

THE SIGN OF QUALITY

ESTABLISHED 1910

HAMMARLUND MANUFACTURING CO., INC.

460 West 34th Street : : New York 1, N. Y.

Printed in U.S.A.

FORM IM-10-75M